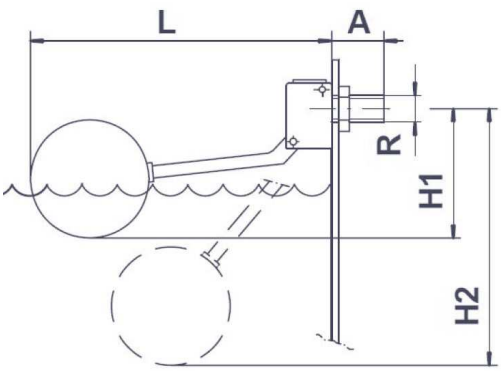

JV110002

Stainless Steel Float Valve c/w Float

DN10-65
BSPP Threaded

DN80-100
Flanged PN10/16

A quality stainless steel tank float valve suitable for various duties.

Features, Benefits & Approvals

- Robustly manufactured
- Compact design
- Low maintenance
- Quiet operation

Pressure & Temperature

Maximum pressure:-
10 Bar

Temperature range:-
0 to 150°C

DN	10	15	20	25	32	40	50	65	80	100
R (BSP)	3/8	1/2	3/4	1	1 1/4	1 1/2	2	2 1/2	-	-
Flange	-	-	-	-	-	-	-	-	PN10/16	PN10/16
A	32	35	42	45	52	60	70	80	170	170
L	300	410	500	580	580	620	720	720	1447	1550
H1	83	127	155	174	164	253	255	277	310	265
H2	235	375	436	521	520	651	736	737	1248	1337
Float Diameter	90	110	160	160	160	200	200	200	300	400
Weight Kg	0.50	0.60	1.45	1.50	1.70	4.30	4.60	5.25	25.5	30.0

Flow Rate (l/h)	1 Bar	2 Bar	3 Bar	4 Bar	6 Bar	8 Bar	10 Bar
DN10	1132	1669	1904	2169	2656	2825	3082
DN15	2829	3998	4895	5657	6790	7978	8938
DN20	4838	6842	8370	9677	11805	13993	15289
DN25	6934	9919	12147	14068	17167	19654	21945
DN32	7440	10643	13034	15095	18420	21089	23547
DN40	15556	21948	26928	31104	37635	43657	51516
DN50	23685	33863	40977	47372	57791	67532	75500
DN65	24869	35556	43025	49740	60680	70908	79275
DN80	55868	79013	96783	111756	136876	158047	173703
DN100	92231	130441	159777	184495	225959	280915	291714

MATERIALS	
Body	Stainless Steel (316)
Sealings	Silicone
Float	Stainless Steel (316)

All data is designed as a guide and should not be regarded as wholly accurate in every detail
© G.J. Johnson & Sons Ltd
Datasheet No. 110002 - 03/21