TUBE – MALE – ELBOW

FEATURES & BENEFITS

- 90° Elbow configuration with an API male stud thread
- Enables tube connection to a mating API or NPT female threaded port

Male Stud Elbow API-Imperial

Male Stud Elbow API-Metric

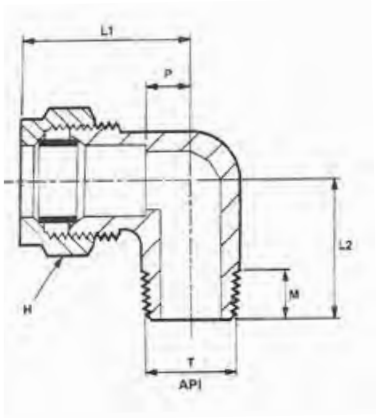

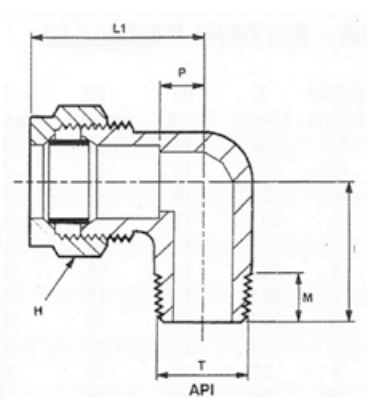

MALE STUD ELBOW API-IMPERIAL

Part No	Tube OD.	T API Male Thread	M Stud Length	L1 Length	L2 Length	H Hex A/F	P Abutment
5023/1API	1/4	1/8	0.375	0.937	0.781	0.601	0.375
2023API	1/4	1/4	0.562	0.937	0.968	0.601	0.375
5028/3API	3/8	1/4	0.562	1.093	1.093	0.82	0.437
2028API	3/8	3/8	0.562	1.093	1.093	0.82	0.437
2031API	1/2	1/2	0.75	1.218	1.312	0.92	0.437

MALE STUD ELBOW API-METRIC

Part No	Tube OD.	T API Male Thread	M Stud Length	L1 Length	L2 Length	H Hex A/F	P Abutment
ME106/085	6	1/8	9.5	24	20.5	12	10.5
ME106/165	6	1/4	10.5	24	20.5	12	10.5
ME108/165	8	1/4	10.5	25.5	20.5	14	10.5
ME110/165	10	1/4	10.5	28.5	23.5	19	13.5

All data is designed as a guide and should not be regarded as wholly accurate in every detail