ADAPTORS

FEATURES & BENEFITS

- A range of brass BSP taper male standpipe adaptors
- Providing a jointing solution where a component with a standard compression end needs to be connected to another component part with a mating BSP taper or BSP parallel BS21 female thread
- The standpipe feature allows rotational adjustment enabling the standpipe stem to be jointed with a corresponding compression end, in any alignment within a 360° turning circle
- The stem feature of the standpipe enables the conversion of a corresponding compression end into a BSP taper male stud thread connection

Standpipe Adaptor BSPT Male-Metric

Standpipe Adaptor BSPT Male-Imperial

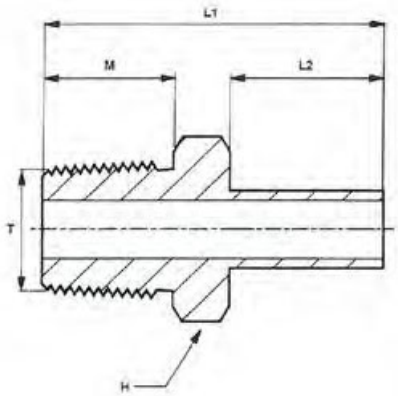

STANDPIPE ADAPTOR BSPT MALE-METRIC

Part No	Standpipe Diameter	T BSPT Male	M Stud Length	L1 Length	L2 Length	H Hex A/F
MSA06/163	6	1/4	12.5	33	15.5	14
MSA08/163	8	1/4	12.5	34	16.5	14
MSA10/163	10	1/4	12.5	34.5	17	14
MSA10/243	10	3/8	13	35.5	17	19
MSA12/323	12	1/2	17	40.5	17	22

STANDPIPE ADAPTOR BSPT MALE-IMPERIAL

Part No	Standpipe Diameter	T BSPT Male	M Stud Length	L1 Length	L2 Length	H Hex A/F
SA03/083	1/4	1/8	0.343	1.25	0.75	0.445
SA03/163	1/4	1/4	0.5	1.437	0.75	0.601

All data is designed as a guide and should not be regarded as wholly accurate in every detail